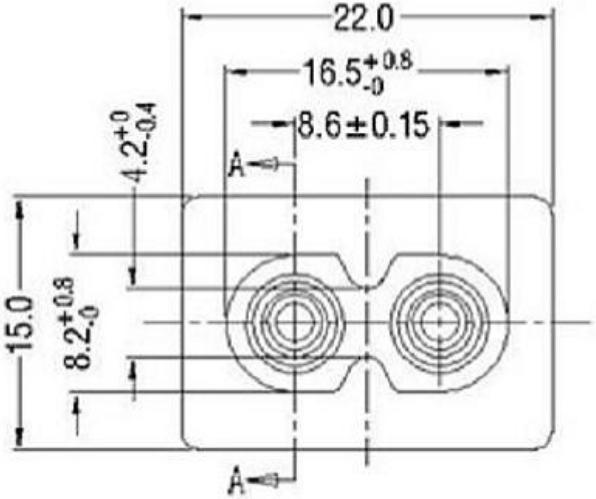

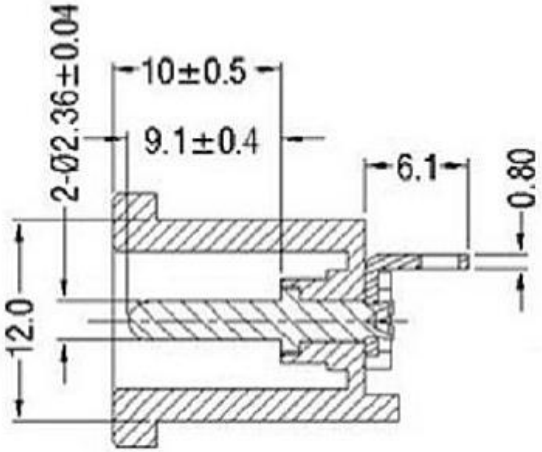

SECTION: A-A

SPEC:

A. Material:

1.Housing: PBT

2.Terminal: COPPER ALLOY, TIN PLATED

B.Electrical Characteristics:

1.Rating: 2.5A 250V~ (UL,CUL,CCC,VDE,SEMKO,NEMKO,FIMKO,DEMKO

2.Electric Strength: AC 2,000 V FOR ONE MINUTE

3.Insulation Resistance: 100MΩ MIN. AT 500V DC

C.Approvals:

UL, CUL, CCC, VDE, SEMKO, NEMKO, FIMKO, DEMKO

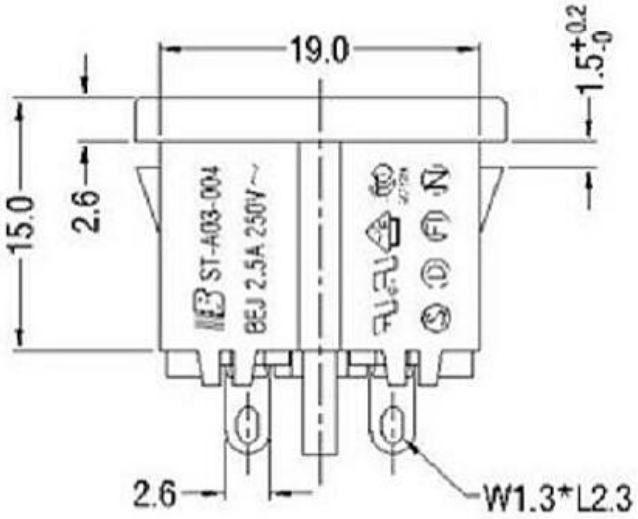

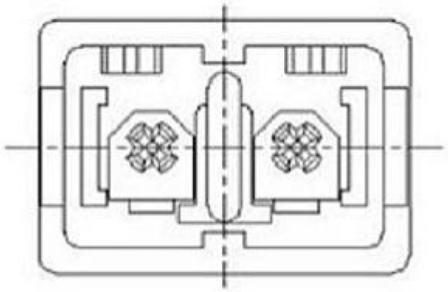

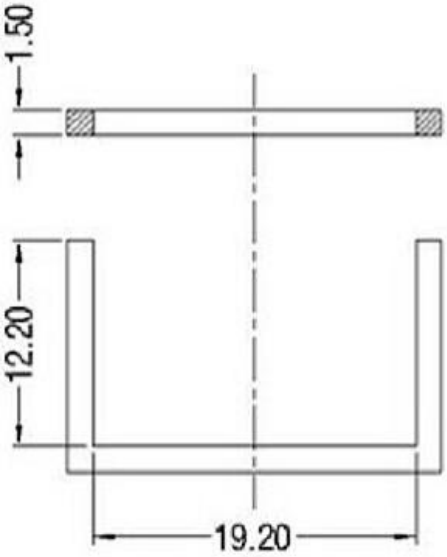

PANEL CUT-OUT

				普通公差 COMMON TOLERANCE :		东莞市高迪电子有限公司					
				UP TO 5	±0.20	单位 UNIT	mm	投影 PROJECTED		品名 PRODUCT NAME	AC POWER JACK
				ABOVE 5 TO 30	±0.30	绘图 DRAWN BY	林晓良	核对 CHECKED BY		型号 MODEL NO.	
				ABOVE 30	±0.50						
REV.	DATE	REVISION DESCRIPTION	ISSUE	ANGULAR	±5°	日期 DATE	19. 08. 12	核准 APPROVAL BY		料号 PART NO.	KD-AC电源插座